TYPE: A5GA1-A150

GLOBE VALVE - CLASS 150 - FORGED STEEL ASTM A105N

FLANGE END ANSI-150

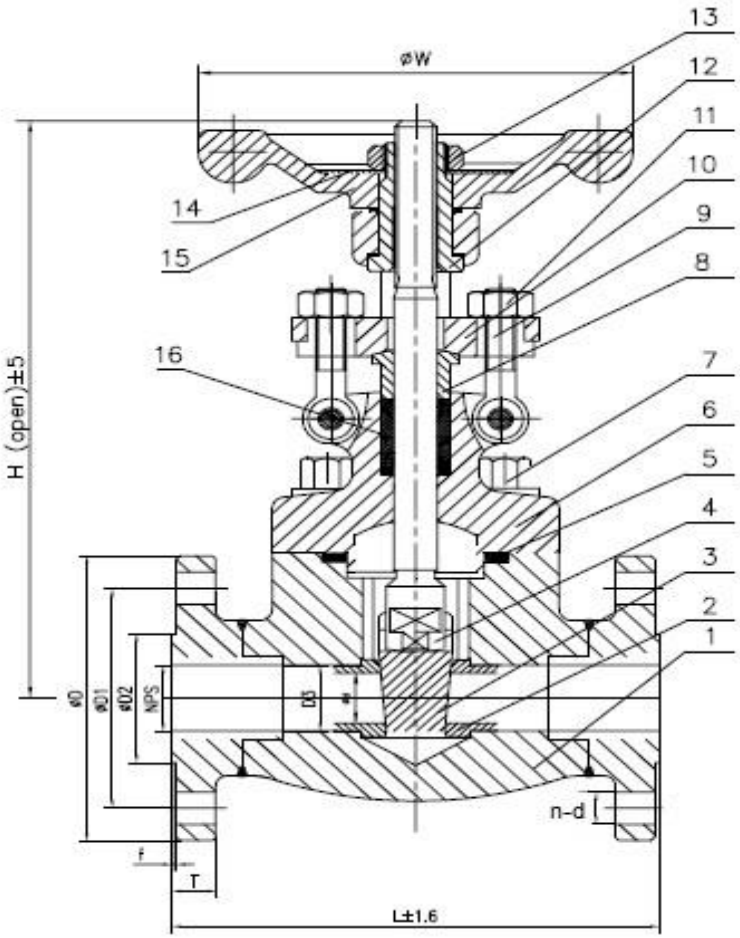

NO.	PART NAME	MATERIAL
1	Body	ASTM A105N
2	Seat Ring	ASTM A182 F6a
3	Wedge	ASTM A182 F6a
4	Stem	ASTM A182 F6a
5	Gasket	SS+Graphite
6	Bonnet	ASTM A105N
7	Bolt	ASTM A193 B7
8	Gland	ASTM A105N
9	Gland Eyebolt	ASTM A193 B7
10	Gland Flange	ASTM A105N
11	Gland Nut	ASTM A194 2H
12	Yoke Nut	ASTM A1035
13	Nut	ASTM A194 2H
14	Nameplate	SS304
15	Handwheel	A197
16	Packing	Flexible Graphite

MANUFACTURE STANDARD		
	Valve Design	API 602 - BS5352
	Test and Inspection	API 598
	End Flange	ASME B16.5
	Face to Face	ASME B16.10
	Temperature	-29 - 425 °C

DIMENSIONS:

SIZE	DN	d	L	H	W	D	D1	D2	D3	T	f	n-Ød
1/2	15	10.3	108	165	96	89	60.5	35	15	11	2	4-16
3/4	20	13.5	117	169	96	98.5	70	43	17	12.5	2	4-16
1	25	18	127	207	120	108	79.5	51	22	14	2	4-16
1-1/4	32	23	140	230	156	117.5	89	63.5	28	16	2	4-16
1-1/2	40	29	165	249	156	127	98.5	73	35	17.5	2	4-16
2	50	36	178	283	178	152.5	120.5	92	42	19	2	4-19

Drawing No.	Date	Type	Rev. No.	By
A51006	2015.05.30	A5GA1-A150	03	AT

GLOBE VALVE - CLASS 150 - FORGED STEEL ASTM A105N

FLANGE END ANSI-150